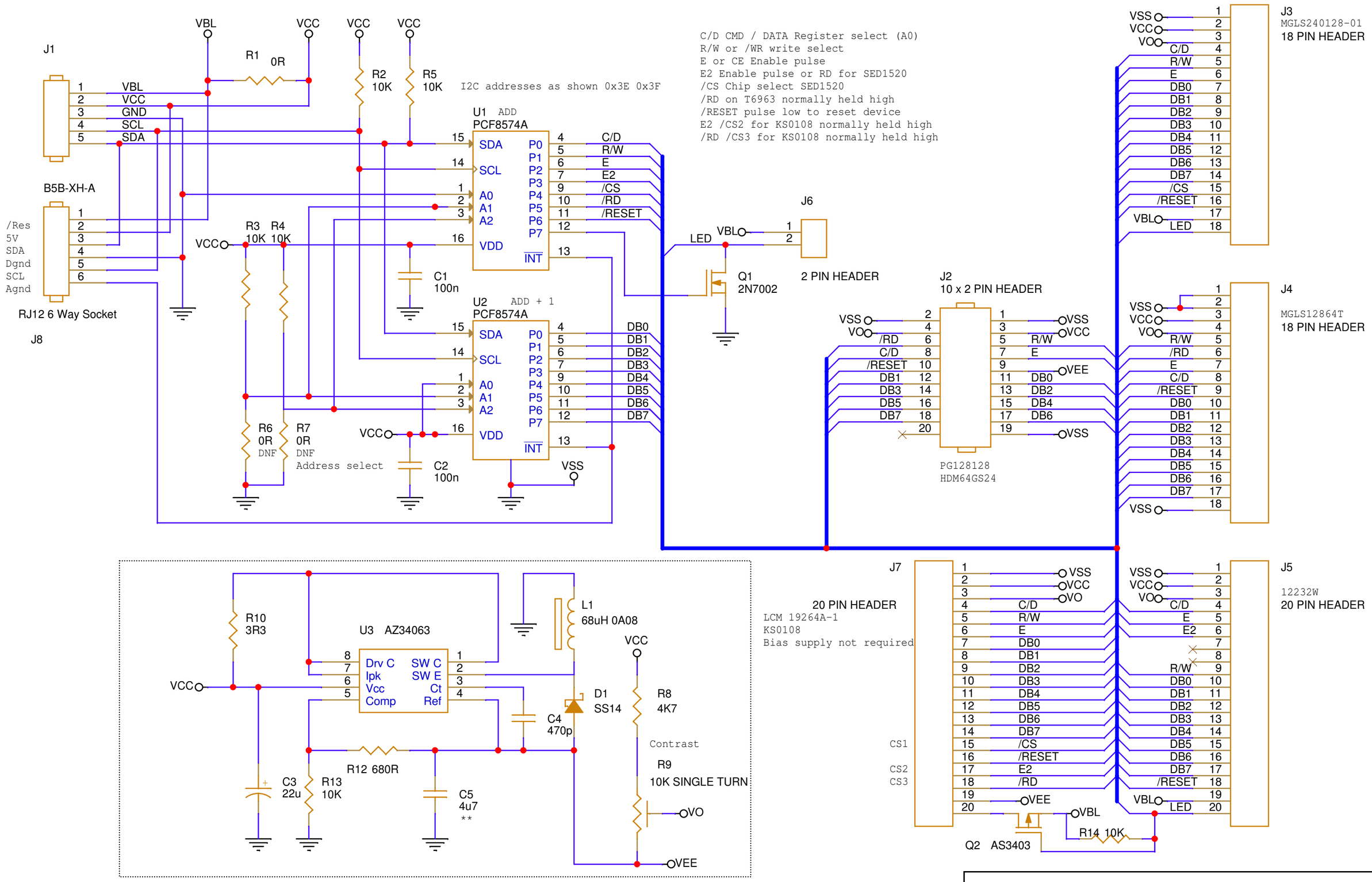

Optional bias voltage generator -18v max 50mA

Bias supply R12 to 680R (larger displays need greater voltage
Bias supply R8 values ammend to 4k7
**Where bias is between 0 and VCC Fit 0R for C5 (12232W)
Added J7 for LCM19264 (KS0108) reused /RD(CS3) & E2 (CS2)
Backlight is also positive switched on LCM19264A-1

Title	I2C_GFXLCD-V1_02	
Size A4	Document Number GFX_I2C_module_V1_02	Rev 2
Date: Friday, March 15, 2024	Sheet 1 of 1	